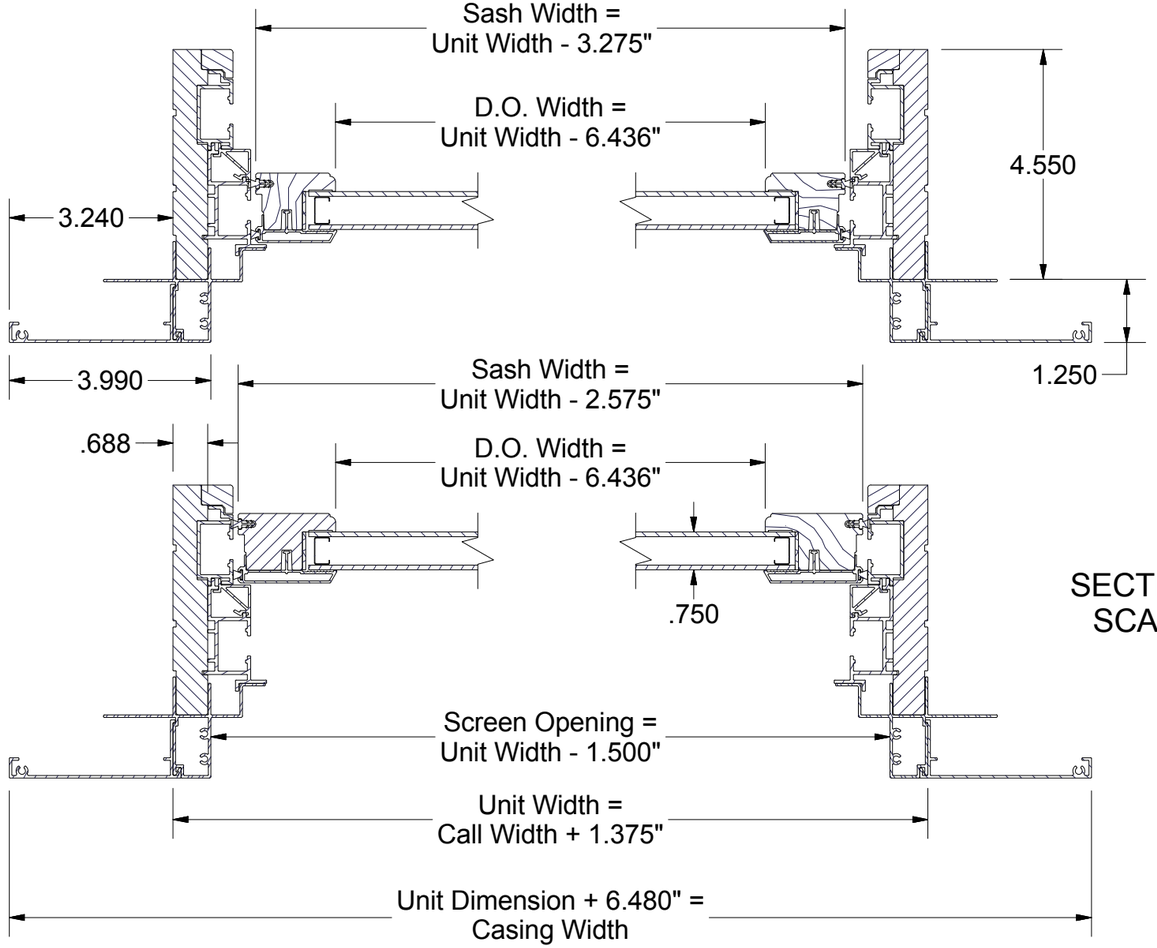

SECTION A-A
SCALE 1/3

SECTION B-B
SCALE 1/3

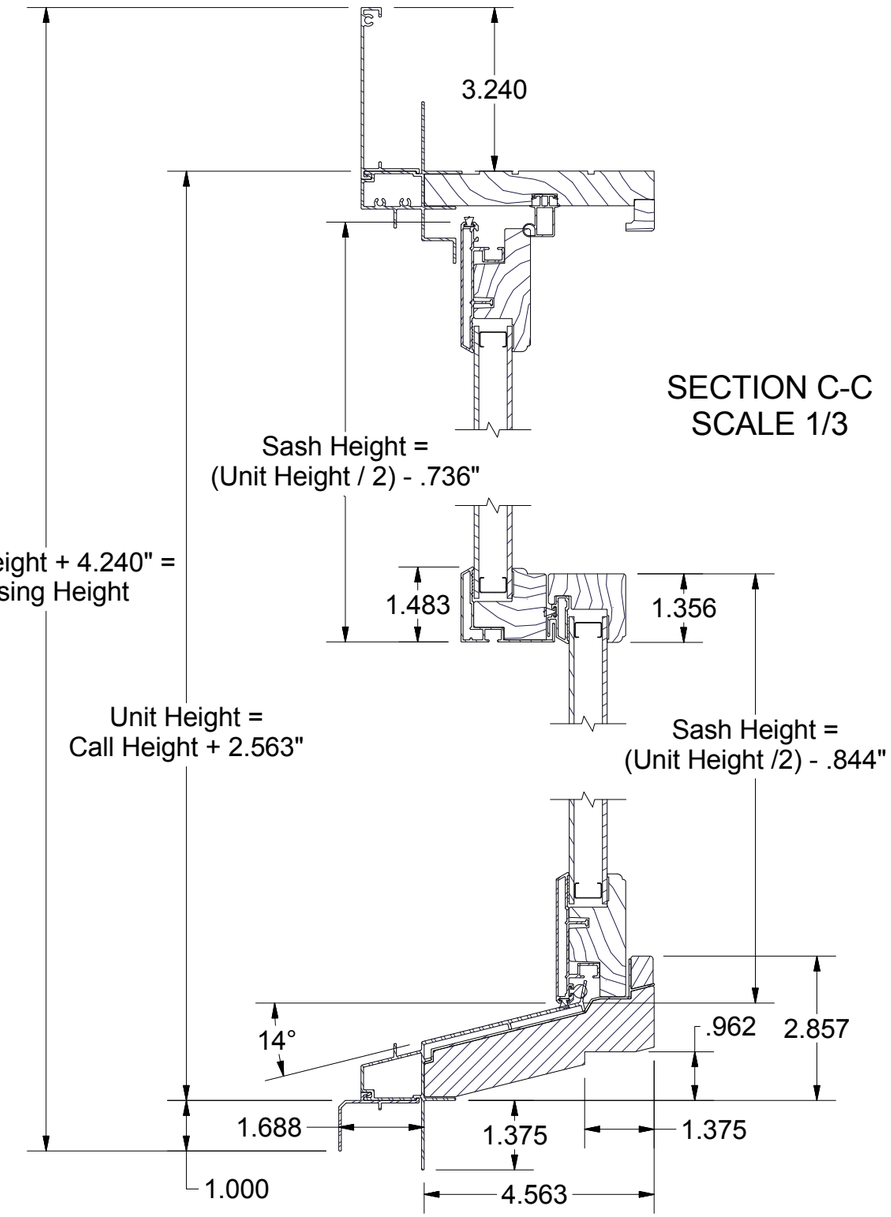

SECTION C-C
SCALE 1/3

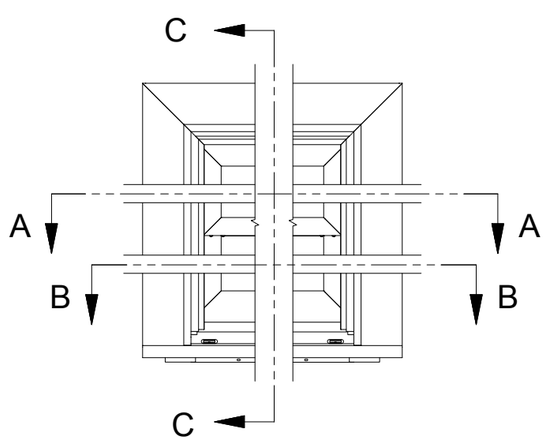

American Craftsman by Ply Gem WINDOWS · DOORS

Tolerances Unless Otherwise Specified. All Dimensions originate at sharp corners unless indicated.
X.XXX ± 0.005, X.XX ± 0.015
FRACTIONAL ± 1/64"
ANGLES ± 1.0°
FLATNESS ± 0.020 per ft.
NOTE: BOXED/CIRCLED DIMS ARE CRITICAL

REV.	ECO	REVISION	DATE	BY
A	NA	Initial Release	8-6-12	SAS

DWG. FILE NAME: EMRDH1004.idw
SCALE:
DRAWN BY: sstrachan
REV.
SHEET SIZE: B
DATE: 8/6/2012
A
DESCRIPTION: Cross-section, Double Hung, Flat Casing