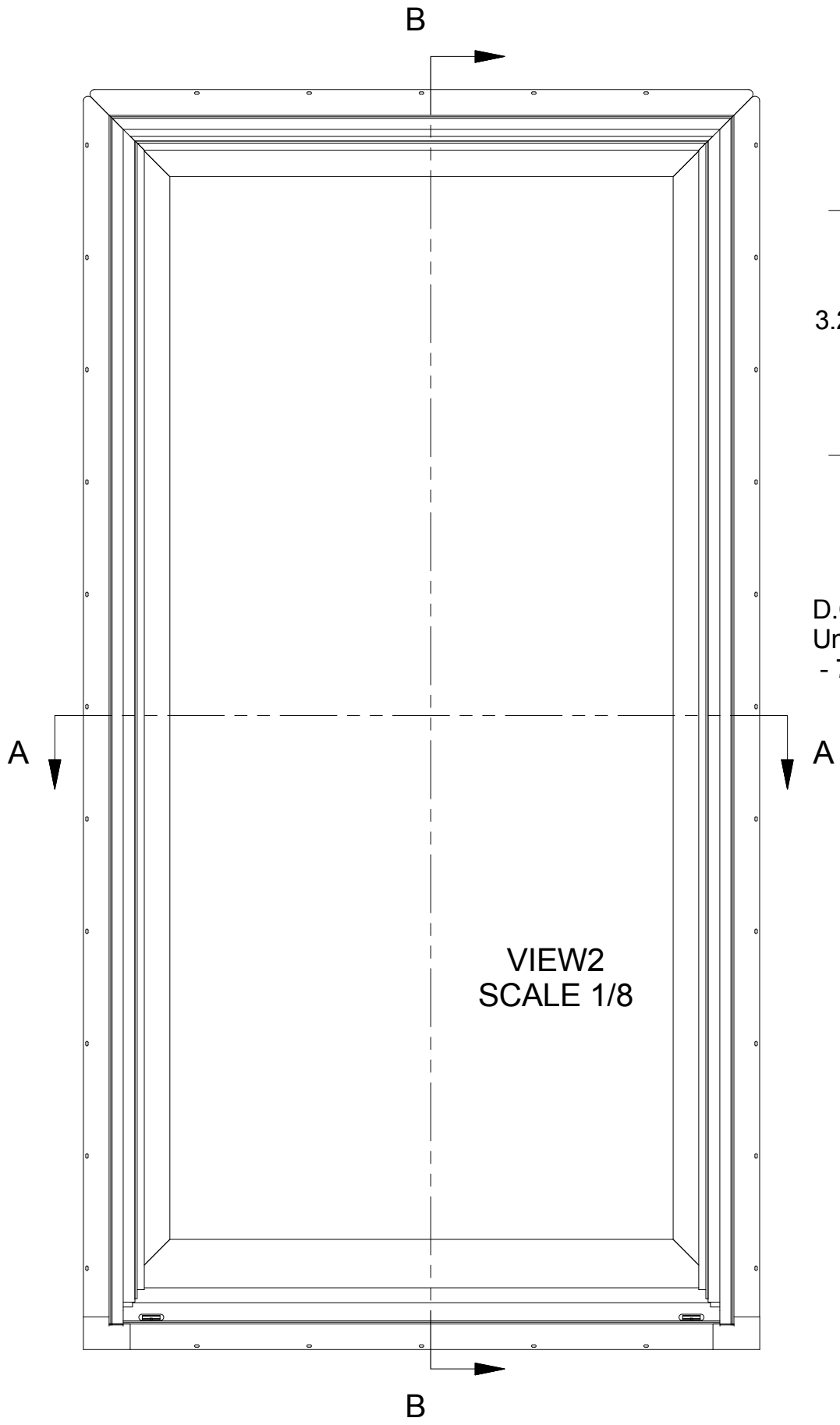

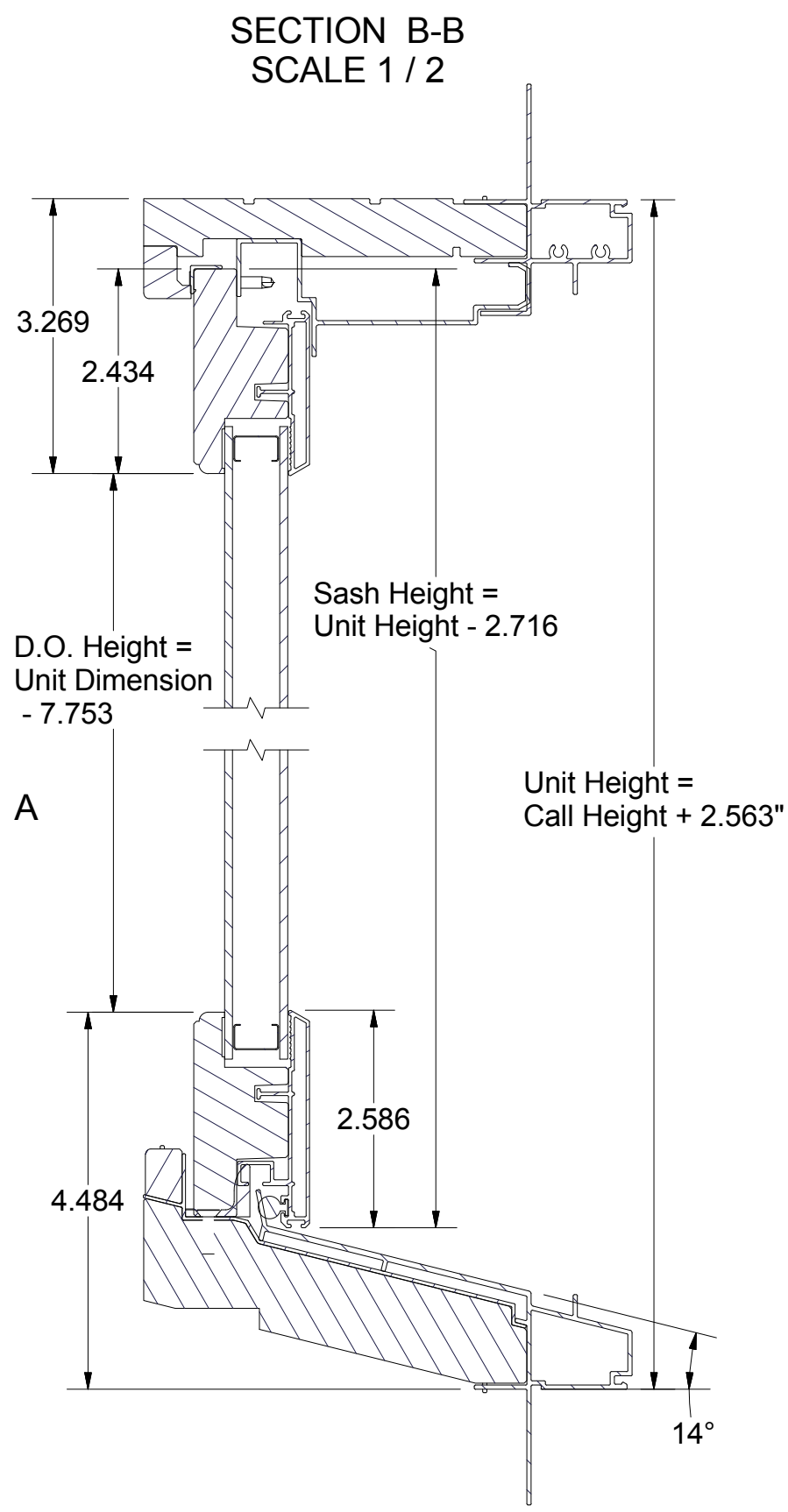

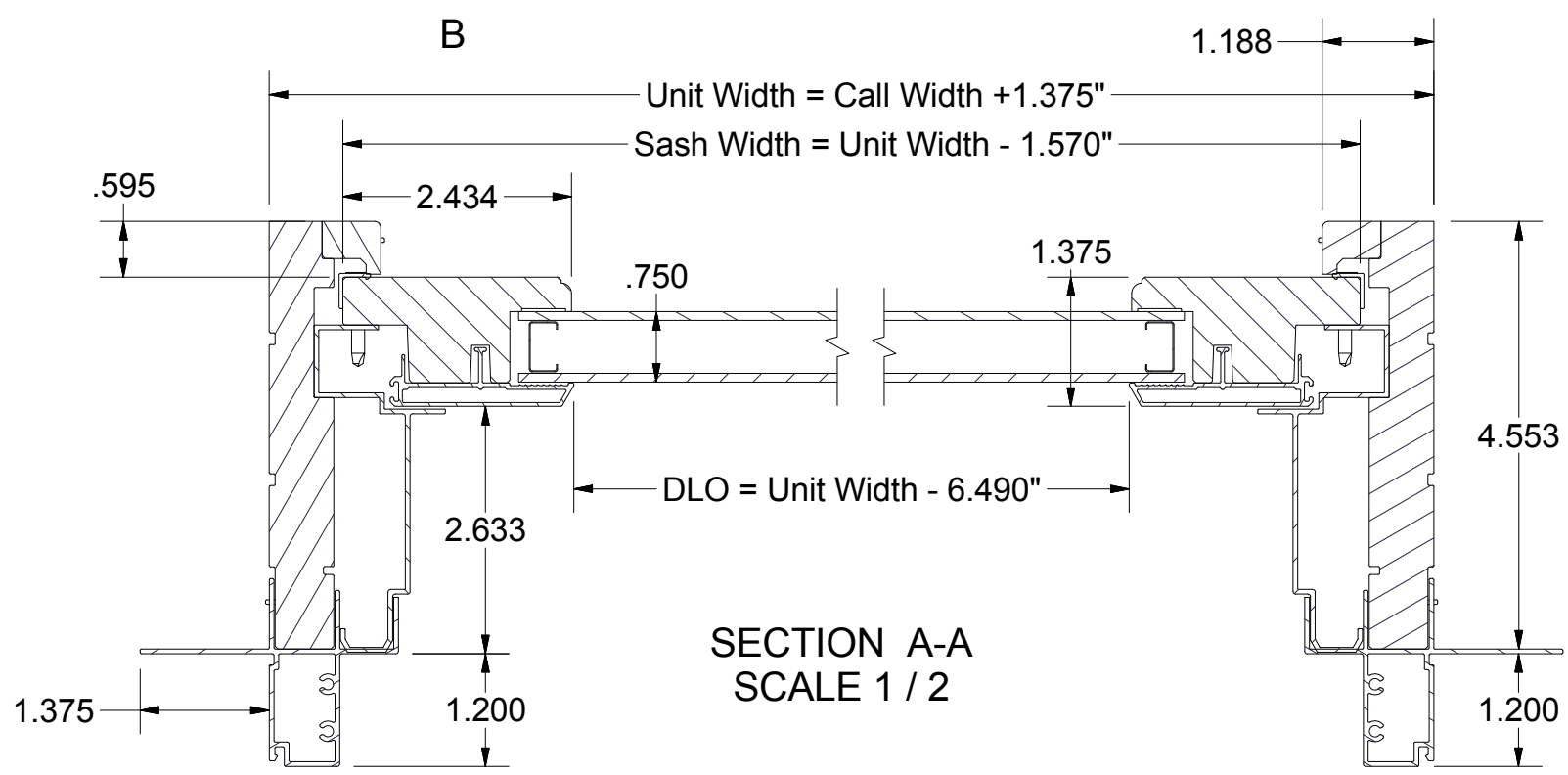

American Craftsman by Ply Gem WINDOWS • DOORS

Tolerances Unless Otherwise Specified. All Dimensions originate at sharp corners unless indicated.
X.XXX ± 0.005, X.XX ± 0.015
FRACTIONAL ± 1/64"
ANGLES ± 1.0°
FLATNESS ± 0.020 per ft.
NOTE: BOXED/CIRCLED DIMS ARE CRITICAL

REV.	ECO	REVISION	DATE	BY
A	08-149	Initial Release	9-10-08	SAS

DWG. FILE NAME: EMRDHP1000.idw

SCALE:	DRAWN BY: sstrachan	REV.
SHEET SIZE: B	DATE: 4/11/2008	A

DESCRIPTION: Cross-section, Double Hung, Stationary