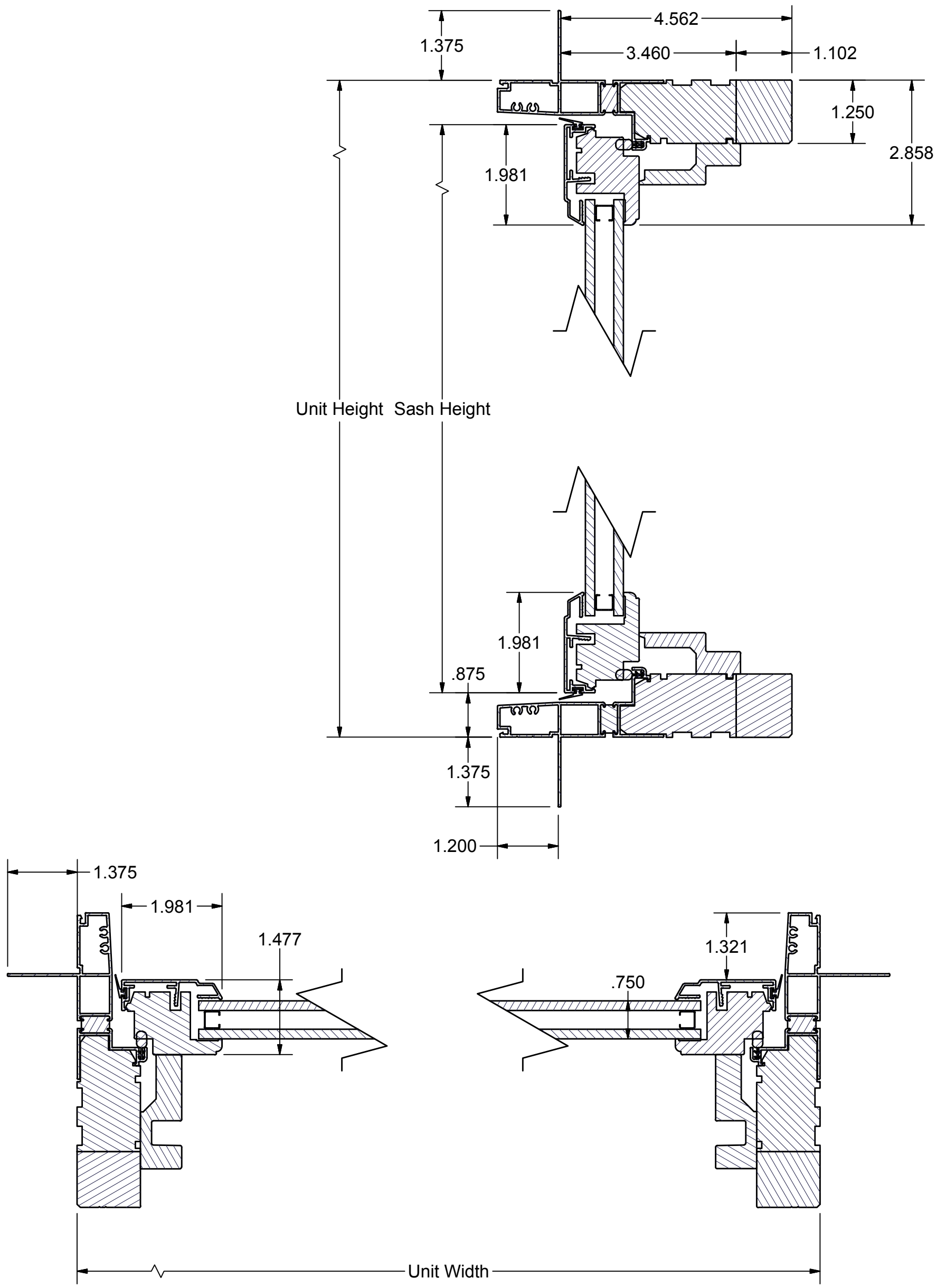

SECTION B-B
SCALE 1/2

American Craftsman by Ply Gem WINDOWS · DOORS

Tolerances Unless Otherwise Specified. All Dimensions originate at sharp corners unless indicated.
X.XXX ± 0.005, X.XX ± 0.015
FRACTIONAL ± 1/64"
ANGLES ± 1.0°
FLATNESS ± 0.020 per ft.
NOTE: BOXED/CIRCLED DIMS ARE CRITICAL

REV.	ECO	REVISION	DATE	BY

DWG. FILE NAME: EMRCAP1001.idw

SCALE:	DRAWN BY: drider	REV.
SHEET SIZE: B	DATE: 8/11/2015	A

DESCRIPTION: Section View, Impact Casement Stationary